High Performance Door
Albany RR300 Plus Alu

ASSA ABLOY

ASSA ABLOY Entrance Systems

The global leader in
door opening solutions

Albany RR300 Plus Alu

- Compact, light weight high speed door for internal use
- Additional equipment available for application in emergency exit areas

ALBANY RR300 PLUS ALU SEALED

Amongst others the curtain guidance in the sideframe is reduced in order to achieve an optimum of sealing and a minimum loss of pressure.

It is suitable for the application in cleanrooms. The door can be installed inside or outside the positive pressure region.

The door can be applied up to ISO class 7.

DOOR DESIGN

The door (side frame, top roll cover and bottom profile) is made from aluminium.

DOOR CURTAIN

Standard: door is made of clear PVC with blue/red reinforcement stripes.

Optional: door curtain includes RollTex® or NomaTex® curtain with / without windows or vision panels or PVC with silicon free reinforcement stripes.

ACTUATORS

Individual applications can include additional safety devices. Actuators such as infrared, radar detectors, push buttons, vehicle detector loops or radio transmitters can be added to the control system. Please contact us for additional information for your specific needs.

KNOCK-OUT CAPABILITY

The Albany RR300 Plus Alu can be equipped with a knock-out capability option. In the event of a collision the bottom profile breaks-away, causing a sensor to stop the door. The door can be easily reset by hand.

SAFETY FEATURES

The door has an electrical safety contact edge. Standard in-line photocell prevents the door from closing when an object is in the doorway. An optional integrated light curtain is available for doors with a minimum height of 1975 mm.

ASSA ABLOY, Besam, Crawford, Megadoor and Albany, as words and logos, are examples of trademarks owned by ASSA ABLOY Entrance Systems or companies within the ASSA ABLOY Group.

ALBANY RR300 PLUS ALU F+R

By means of special additions the Albany RR300 Plus Alu can be transferred into a high performance door for emergency exits and escape routes (up to a maximum size of 4000 x 4000 mm).

In this case the door is equipped with several monitoring devices, e.g. radar motion detector, automatic self-opening and regular self-testing.

The model Albany RR300 Plus Alu Sealed is not suitable as emergency exit.

MOTOR COVER AND TOP ROLL COVER

Standard: without cover.
(for standard door Albany RR300 Plus Alu)

Scope of delivery includes drive unit and top roll cover
(for door Albany RR300 Plus Alu with additional sealing)

Scope of delivery includes top roll cover
(for the emergency exit and escape route version)

Optional: motor cover is available in plastic RAL 7040, stainless steel or steel powder coated RAL 9006 (for standard door Albany RR300 Plus Alu)

Optional: top roll cover is available in aluminum.
(for standard door Albany RR300 Plus Alu)

INTEGRATED CABLE CHAIN

As standard the door is equipped with an internal cable routing to the bottom profil.

MOTOR POSITION

Gear motor, available left or right hand side.

CONTROL BOX

As standard the door is made of a relay control system MCS-R.

According to the operation conditions optional a contactor control system ACS 50 and a frequency converter control system MCS-FC and MCC are available. With the basic control system MCS-R and MCS-FC a convenient operation with high flexibility, fast start-up and easy handling of the door is allowed. The powerful MCC frequency converter control system with Torque Vectoring of the drive unit, connected to the wide range of functions, enables nearly an unlimited use of the door. The MCC guarantees a soft start, optimal increase in speed, maximum speeds and a long service life of the door.

Figure shows MCC control system.

MANUAL OR AUTOMATIC EGRESS

Manual or automatic egress opens the door up to 2.0 m in the event of a power failure.

High Performance Door Albany RR300 Plus Alu

ADVANTAGES OF ALBANY RR300 PLUS ALU

- Space saving design enables installation onto door openings with restricted space
- Easy to clean door curtain
- Integrated balancing system allows for a manual or automatic egress.

APPLICATION

- As an interior door to separate work areas
- For climate control and energy conservation
- In protected exterior applications
- In applications with strict hygiene requirements
- In distribution and warehouse applications

DESIGN

Self supporting side frames and top roll are made of aluminum. The model with option Sealed is suitable for cleanrooms up to ISO class 7.

DOOR CURTAIN

The Albany RR300 Plus Alu door curtain is made of clear PVC material with blue reinforced vertical stripes (optional colors are available). RollTex® fabric is available for applications needing a more durable curtain material. The door curtain is equipped with special wind tabs that travel in the side frame guides and gives the Albany RR300 remarkable wind resistance.

EGRESS

- Manual activation: the door can be opened by manually releasing the brake on the balancing system.
- Automatic activation (option): the door opens automatically in the event of a power outage.

Depending on the width / height ratio the door opens completely or partly (up to 2.0 m)

SAFETY STANDARDS

The door is designed according to the Workplace Directive of the UVV regulations and the harmonized CE Guidelines including the EN 13241-1.

INDICATION OF RISK

The security of the door is designed for normal use and for vehicles in an industrial environment corresponding to the harmonised CE Guidelines. In consideration of the on site situation – especially in case of pedestrian use – additional safety measures, such as additional actuators may be required. In addition, special environmental conditions may impact the choice of door type. For more information or to schedule an on-site inspection, please contact an ASSA ABLOY Entrance Systems sales engineer.

TECHNICAL DATA	Albany RR300 Plus Alu Standard	Albany RR300 Plus Alu Sealed with increased airtightness
Interior door	suitable	suitable
Exterior door	partially suitable	not suitable
Wind resistance (EN 12424)	class 1	class 0
Leckage (for doors 1500 x 2000 mm)	-	65m³ at a pressure difference of 25 Pa
Door dimension (mm)	standard with MCS-R optional with ACS50	standard with MCC
(DW min./max.) (DH min./max.)	1000 / 4000 mm 1000 / 4200 mm	1000 / 3000 mm 1000 / 3000 mm
Door dimension (mm)	optional with MCS-FC optional with MCC	
(DW min./max.) (DH min./max.)	1000 / 5000 mm 1000 / 5000 mm	
Surface		
Side frames, aluminium anodised	✓	✓
Bottom profile, aluminium anodised	✓	✓
Top roll, aluminium anodised	✓	✓
Top roll, stainless steel	✓	–
Top roll cover	•[1)]	✓
Motor cover	•[1)]	✓
Door curtain		
PVC with blue/red reinforcement stripes	✓	✓
PVC with coloured reinforcement stripes	•	•
PVC with silicon free reinforcement stripes blue/black	•	•
RollTex® Plus*	•	•
RollTex® Original*	•	–
NomaTex® */**	•	•
Wind tabs	✓	✓
Curtain tension	•	–
Counterbalance	✓	✓
Safety		
Electrical safety contact edge	✓	✓
Door line photocell	✓	✓
Light curtain (integrated)	•[2)]	–
Fall down protection by tension springs	✓	✓
Knock-out capability	•	–
Manual activation with bowden lever	✓	✓
Automatic egress	•	–

Control Unit	Albany MCS-R	Albany MCS-FC	Albany ACS 50	Albany MCC
Standard/Option	✓	•	•	•
Speed (m/s) Open/close to max.	1,2/1,2	1,5/0,8	1,2/1,2	2,2/0,9
Max. allowed cycle times (1/min.)	0,5	1	1	3
Protection	IP 54	IP 54	IP 55	IP 55
Motor power	0,65 kW	0,75 kW	0,75 kW	0,75 kW
Power supply	3/(N)/PE AC: 400V 50Hz	1/N/PE AC: 230V 50/60Hz	3/(N)/PE AC: 220/230/380/400/415V 50Hz	3/(N)/PE AC: 380/400/415V/440/480V 50/60Hz
Power supply with additional transformer	-	-	3/(N)/PE AC: 440/480/500V 50Hz	3/(N)/PE AC: 220/230/500V 50/60Hz
Fuse protection by customer	10 – 16A C-characteristic[3]	16A C-characteristic[3]	16A C-characteristic[3]	10 – 16A B or C-characteristic[3]
Potential free contacts max. 250 V	✓	✓	✓	•
Traffic light function without direction detection	✓	✓	✓	✓
Traffic light function with direction detection	•	•	-	✓
Flashing alarm light	✓	✓	✓	✓
Error message	plain text	plain text	LED	plain text

• Option ✓ Standard – not possible

* optional with windows / ** optional with vision panels

[1)] For doors of height ≤ 2500 mm the use of top roll and motor cover is required according to standard EN 13241-1.

[2)] Not in combination with knock-out capability. [3)] or comparable

General Drawing Albany RR300 Plus Alu

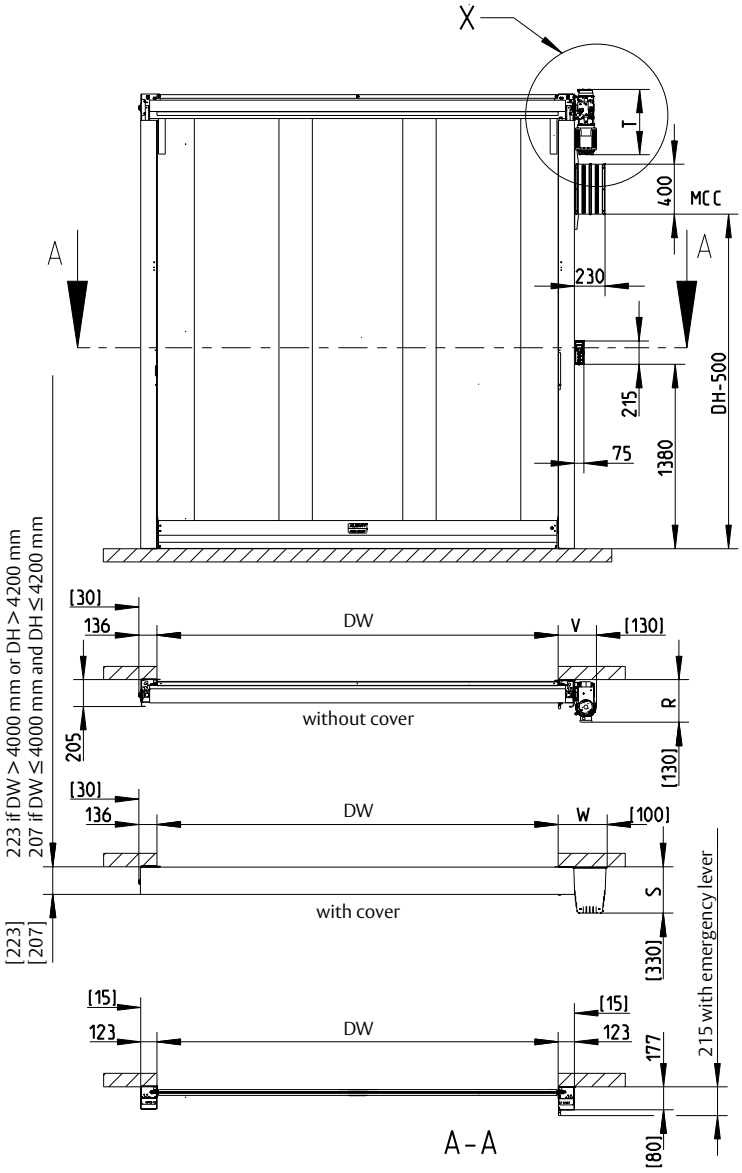

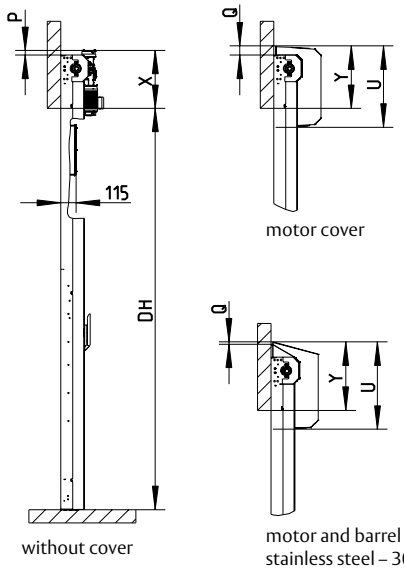

only for MCS

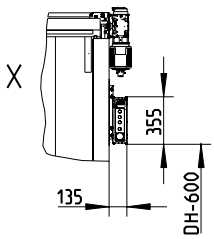

Available sizes			
		DW	DH
	min. (mm)*	1000	1000
	max. (mm)**	5000	5000
* Crash	min. (mm)	1300	1000
** with Top 1,3	max. (mm)	3500	3500
** with Option sealed	max. (mm)	3000	3000
** with Albany ACS 50	max. (mm)	4000	4200
** with Flex Edge	max. (mm)	4000	5000

Without motor cover		
	Albany ACS 50 / Albany MCC / without control	Albany MCS-R
X	443	400
V	285	245
R	315, if DW ≤ 4000 and DH ≤ 4200	240
R	325, if DW > 4000 or H > 4200	240
T	500	415
P	45	0

With motor cover			
	Plastic	Steel	Stainless steel
Y	470	465	515
W	366	362	362
S	340	340	340
U	610	600	650
Q	70	65	18 (30°), 115 (0°)

Control unit					
		Albany ACS 50	**Albany MCC**	**Albany MCS-FC**	**Albany MCS-R**
Dimensions W × H × D	mm	300 × 400 × 210	220 × 380 × 100	215 × 345 × 140	215 × 345 × 140
Dimensions frequency converter W × H × D	mm			106 × 355 × 106	

[ ] = Space needed for installation

8300R0020/m
Date: 24.11.2014

ASSA ABLOY Entrance Systems is a leading supplier of entrance automation solutions for efficient flow of goods and people. With our globally recognized product brands Besam, Crawford, Megadoor and Albany, we offer products and services dedicated to satisfying end-user needs for safe, secure, convenient and sustainable operations.
ASSA ABLOY Entrance Systems is a division within ASSA ABLOY.

assaabloyentrance.com

Fixing plan Albany RR300 Plus Alu

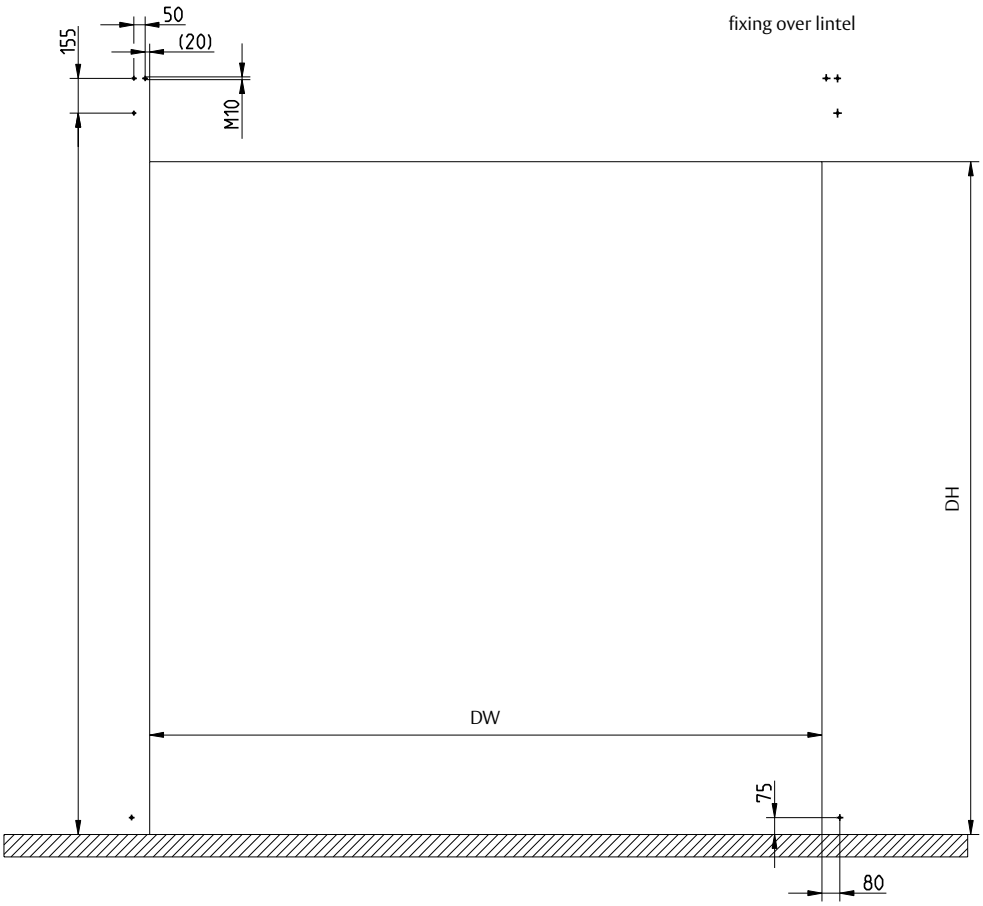

ASSA ABLOY Entrance Systems

info.aaes@assaabloy.com
assaabloyentrance.com

Follow us:

Please enter *ASSA ABLOY Entrance* in the channel's search field.

© ASSA ABLOY Entrance Systems AB PL.MAN/Albany RR300 Plus Alu/DEU,EN-1.1/1503 / 64 100 138 Technical data subject to change without notice